ROTARY SWITCH
SERIES NRT 04

CORD OPERTED ROTARY SWITCH
TECHNICAL INFORMATION

Type	1Pole, 3 Way
Materials	
1) Body	ABS
2) Cap	Bakelite
3) Shaft	Poly Acetal
4) Current Carrying Parts	Ph, Pb & Cu Alloy
Properties	
1) Contact Rating	6 AMP 240 V AC
2) Switching Angle	45°
3) Electrical Life Operation	10,000 Operation

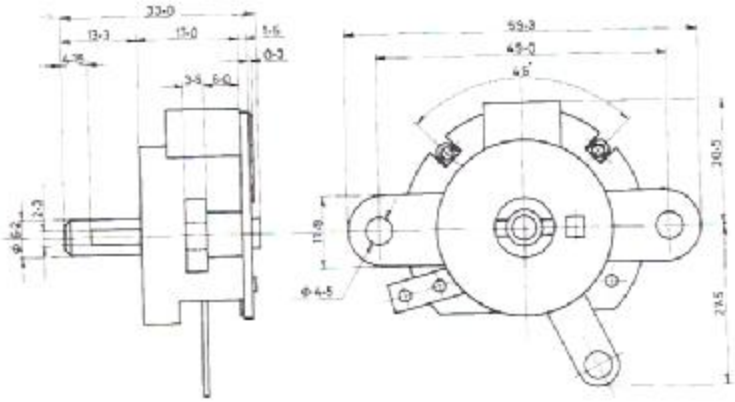

NAMOLECTRIC CONTROLS

PDF created with pdfFactory trial version www.pdffactory.com